Boston RC Brace Order Form

Date:_____ Due Date:_____ PO #:_____ Contact:_____
Ship To:_____ Ship Via:_____ Email:_____
Address:_____ Account #:_____ Phone:_____
City:_____ State:_____ Zip:_____ ☐ Previous RC Wearer Scan Label:_____

Patient Name:_____ Ht: ____ft____in Wt:_____lbs
Age:_____ Sex:_____ Diagnosis:_____

**Required	Lumbar/TL	Thoracic
Convexity	☐Left ☐Right	☐Left ☐Right
Apical Vertebra		
Cobb Angle		
Scoliometer Reading		

Anatomical Measurements

*All measurements required

	Cir.	M/L	A/P
Axilla	cm	cm	
Xyphoid	cm	cm	cm
Waist	cm	cm	cm
Trochanter	cm	cm	cm

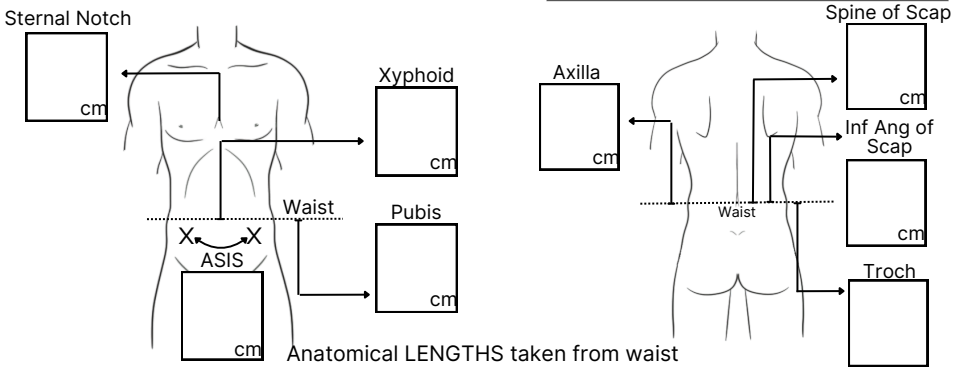

Brace Design

Plastic
☐ **1/8" Copoly**
☐ Other: _____

Straps
☐ **White**
☐ Black

Transfer
1st_____
2nd_____

OPSB™ Sensor

☐ Send Sensor
☐ Sensor Hole

Rigo Cheneau Classification

Selection required

☐ A1: L3 titled to thoracic apex
☐ Open Hip
☐ A2: L3/L4 horizontal
☐ A3: L2/L3 apex, L4 tilted to lumbar

☐ B1: L1/L2 apex
☐ B2: T12 apex

☐ C1: No lumbar curve
☐ C2: Lumbar Curve on CSL

☐ E1: L1 apex, curve off CSL
☐ E2: T11/T12 apex off CSL

CAD Design Section (Optional)

Lumbar/TL
☐ Left ☐ Right
☐ Pad Only

☐ TL Extension
Height_____cm

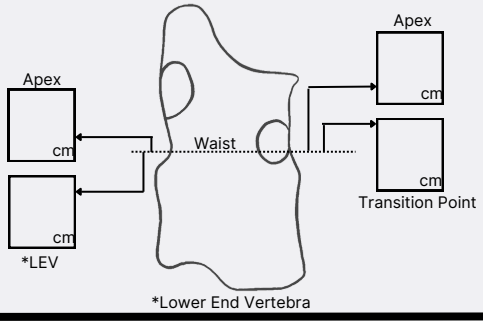

Thoracic Extension
☐ Left ☐ Right
Height_____cm

☐ Open Hip

Axillary Modifications
☐ Left ☐ Right
☐ Outset Axilla : _____mm
☐ Inset Axilla : _____mm

☐ Posterior Extension

Scoli Tees
☐ Single
☐ Double

Qty: _____

Notes:

Boston Brace International, Inc. ("Boston O&P") is a company that is part of the OP Specialty Bracing division

37 Shuman Ave Stoughton MA 02072 - customerservice@bostonoandp.com